TYPE	A (MM)
R 70	70
R 75	75

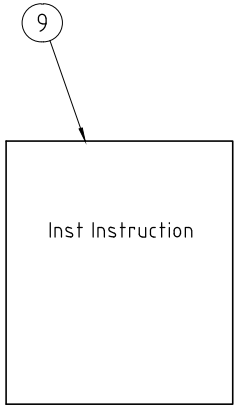

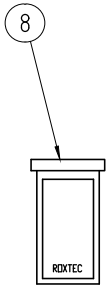

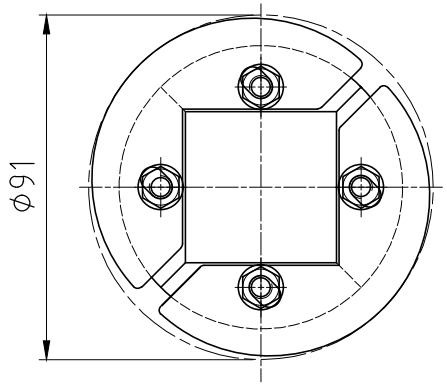

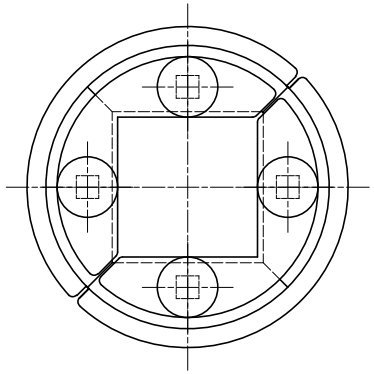

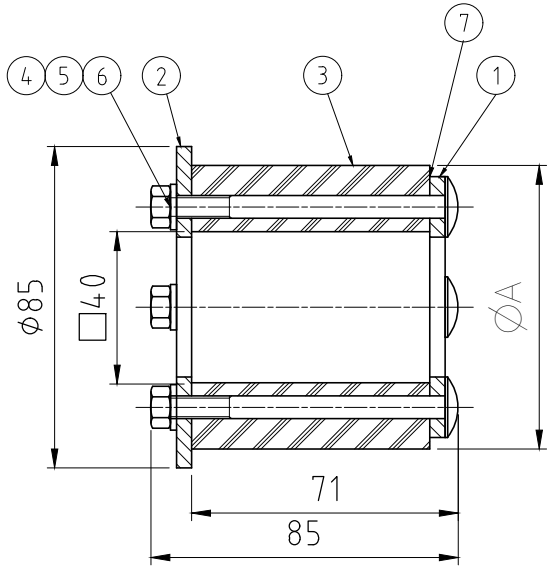

A-A

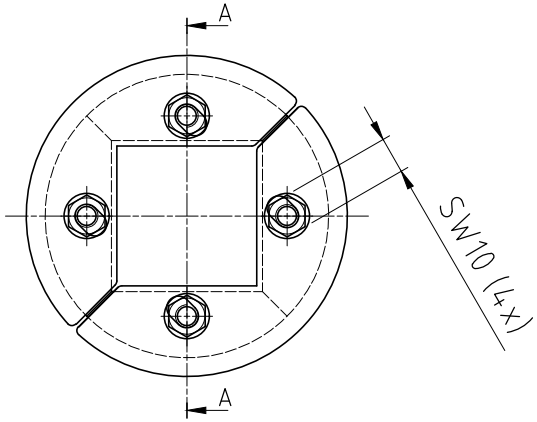

Item	Qty	Designation	Specification	NetWeight
9	1	INSTALLATION INSTRUCTION		-
8	1	LUBRICANT	10ML	-
7	4	GASKET	EPDM	-
6	4	WASHER	M6 A4	-
5	4	NUT	MVBF M6X80 A4	-
4	4	OVAL HEAD SCREW	M6 A4	-
3	1	RUBBER FRAME	ROXYLON	-
2	2	FRONT FITTING	ACID PROOF STAINLESS STEEL	-
1	2	REAR FITTING	ACID PROOF STAINLESS STEEL	-

H

General tolerances used for manufacturing shown in document DOC-002180

Designed by: se-joahel | Created Date: 2003-10-30 | Latest save date: 2020-11-10 | Format: A2 | Scale: 1:1 | Sheet no | TotWeight: -

Roxtec
www.roxtec.com

Title: R FRAMES
R 70-75

Projection method

Restricted due to: Information drawing

Drawing number: S1005511

Rev: H

Rev	Type of revision	Date	Sign
H	PARTSLIST UPDATED.	2020-11-06	se-jenboh

All rights reserved. Unauthorized reproduction, use or disclosure to third parties is strictly forbidden.

版权所有。未经授权严禁复制，使用以及向第三方泄漏。

Rev 2.0

Information drawings show general design and nominal dimensions if not else stated