SIZE 39-92

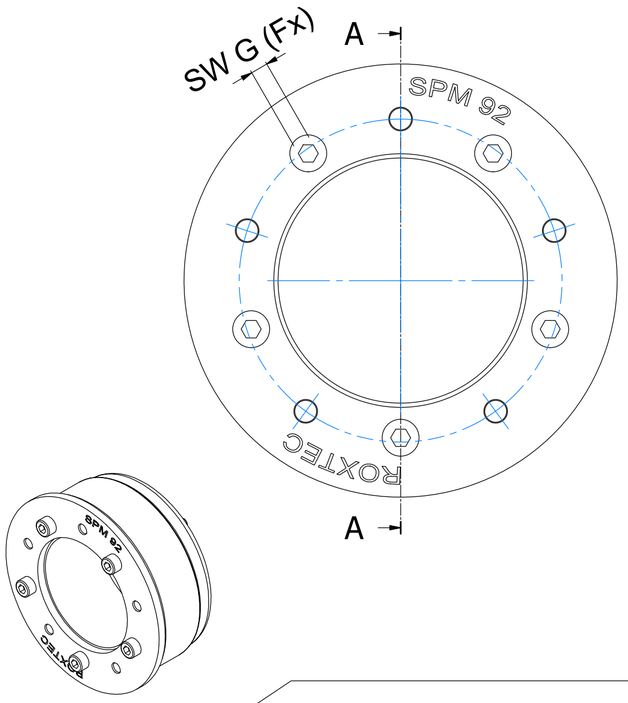

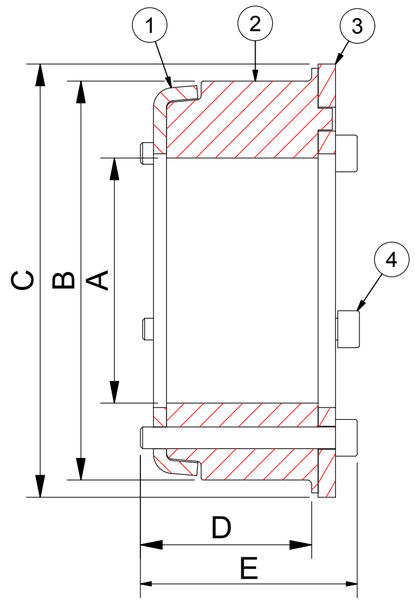

A-A (1 : 1)

SIZE 103-279

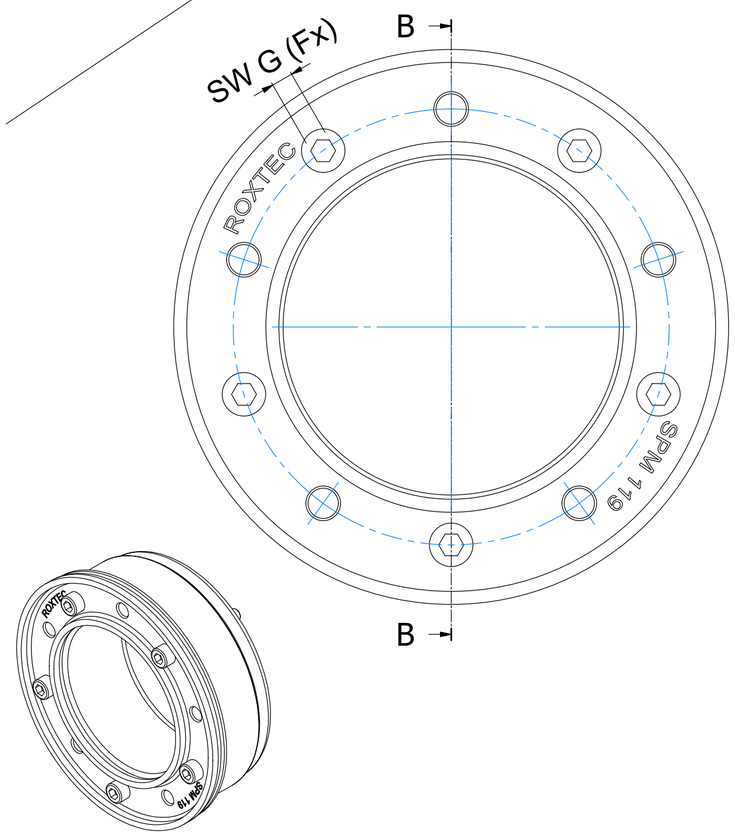

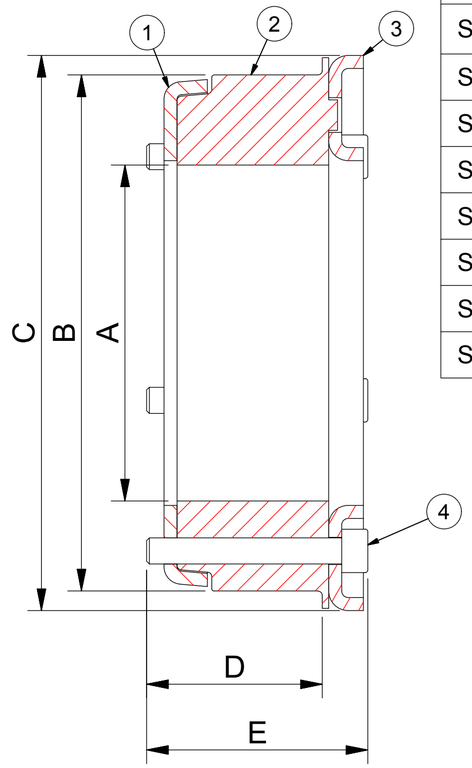

B-B (1 : 1)

SIZE	PIPE SIZE ØA (MM)	APERTURE SIZE ØB (MM)	ØC (MM)	D (MM)	E (MM)	F (QTY)	G (MM)
SPM 39	8-12	39-43	49	41	49	3	3
SPM 41	12-16	41-45	51	41	49	3	3
SPM 48	16-20	48-52	59	40	49	4	3
SPM 54	19-23	53,5-57,5	64	40	49	4	3
SPM 59	24-28	58,5-62,5	69	37	47	4	4
SPM 62	27-31	61,5-65,5	72	37	47	4	4
SPM 69	32-36	68,5-72,5	79	37	47	4	4
SPM 77	37-42	77-81	88	40	50	5	4
SPM 81	41,4-45,4	81-85	89	40	51	5	5
SPM 87	47-51	87-91	95	40	51	5	5
SPM 92	52-56	92-96	100	40	51	5	5
SPM 103	56,2-61,1	103-107	112	41	51	4	5
SPM 119	72,2-76,9	119-123	128	37	47	5	5
SPM 138	88-92	138-142	147	41	51	5	5
SPM 149	99-103	149-153	159	41	51	6	5
SPM 157	107-111	157-161	166	41	51	6	5
SPM 168	113-117	168-172	180	46	58	6	6
SPM 178	123-127	178-182	188	46	58	6	6
SPM 188	131-135	188-192	198	46	58	8	6
SPM 196	138,5-143	196-200	206	46	58	8	6
SPM 217	157-162	217-221	229	46	58	8	6
SPM 226	167-171	226-230	238	46	58	8	6
SPM 279	218-222	279-283	291	46	58	10	6

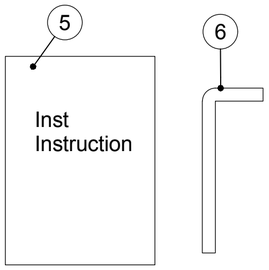

ITEM	QTY	Designation	Specification	Weight
6	1	ALLEN KEY	MILD STEEL FZB	
5	1	INSTALLATION INSTRUCTION	-	
4	X	SCREW	MC6S A4-70 (ISO 4762/DIN 912)	
3	1	FRONT FITTING	ACID PROOF STAINLESS STEEL	
2	1	SEALING BODY	ROXYLON HEFR	
1	1	REAR FITTING	ACID PROOF STAINLESS STEEL	

General tolerance: ISO 2768-1/2-m/K EN ISO 13920-BF	Welded details: EN ISO 5817-B EN ISO 10042-B	General surface roughness: Ra 12,5	Designed by/date se-andrek 2015-04-10	Latest save date 2017-03-01	Format A2	Scale	Sheet no 1 / 1	TotWeight N/A

Roxtec
www.roxtec.com

Title
SPM 39-279
ASSEMBLY

Restricted due to
Information drawing

Drawing number
S1502970

Rev
D

Projection method

Rev	Type of revision	Date	Sign
D	MORE SIZES	2016-08-25	se-andrek

All rights reserved. Unauthorized reproduction, use or disclosure to third parties is strictly forbidden.
洛克赛克保留所有权利。未经授权严禁复制，使用以及向第三方泄漏。