All rights reserved. Unauthorized reproduction, use or disclosure to third parties is strictly forbidden.
洛克赛克保留所有权利。未经授权严禁复制，使用以及向第三方泄漏。

MATERIAL ACIDPROOF STAINLESS STEEL	EN 10088/1.4435
MATERIAL HOT DIP GALVANIZED STEEL	EN 10142/DX51D+Z275

D

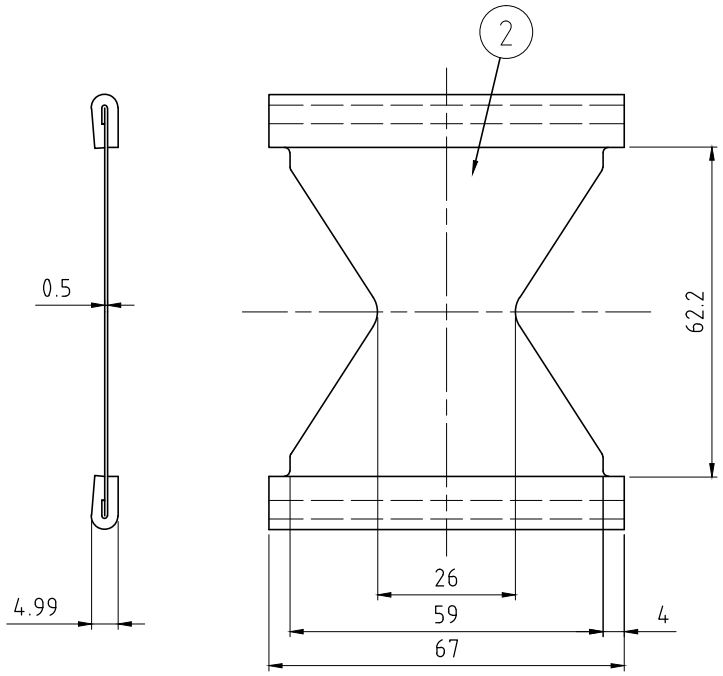

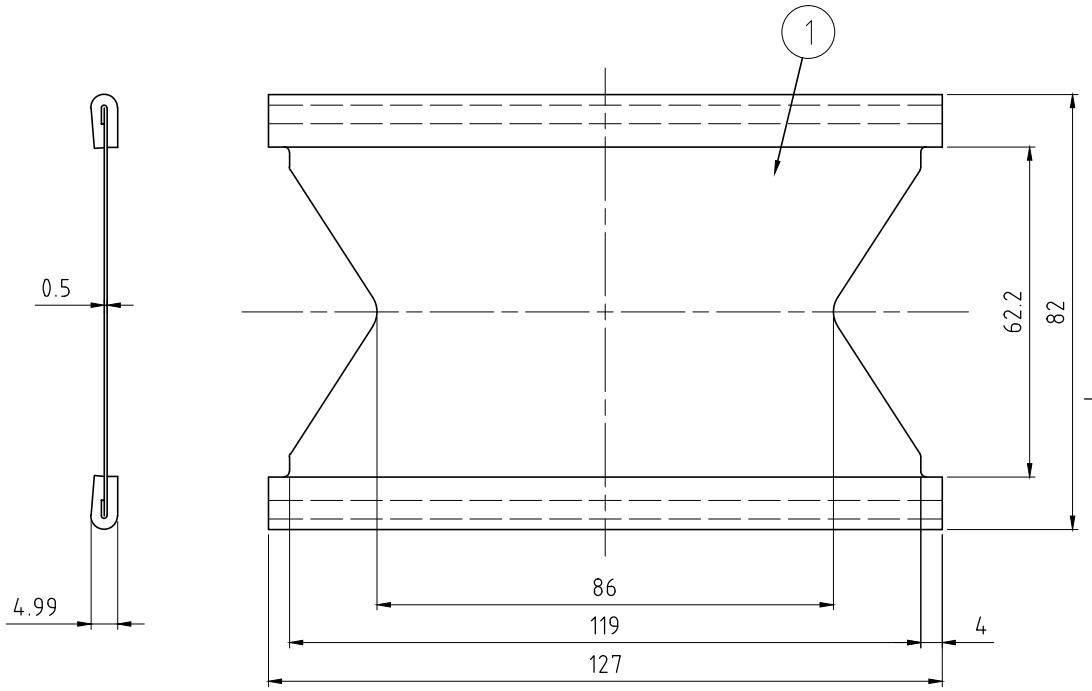

Item	Qty	Designation	Specification	Net Weight
2	-	STAYPLATE 60	GALV / AISI 316	-
1	-	STAYPLATE 120	GALV / AISI 316	-

General tolerance ISO 2768-1/2-m/K EN ISO 13920-BF	Welded details EN ISO 5817-B EN ISO 10042-B	General surface roughness, Ra 12,5	Designed by se-joahel	Created Date 2003-11-03	Approved by se-andrek	Approved Date 2017-06-27	Format A3	Scale 1:1

Tot Weight

Roxtec
www.roxtec.com

Title: STAYPLATE
SP-120 / SP-60

Projection method

Restricted due to: Information drawing

Drawing number: S1005548

Rev: D

Rev	Type of revision	Date	Sign
D	MATERIAL TABLE UPDATED	2017-06-27	se-jenboh