Cable and pipe transits for naval vessels

Roxtec

Roxtec sealing solutions onboard naval vessels

Explore the multitude of applications where you can benefit from our solutions.

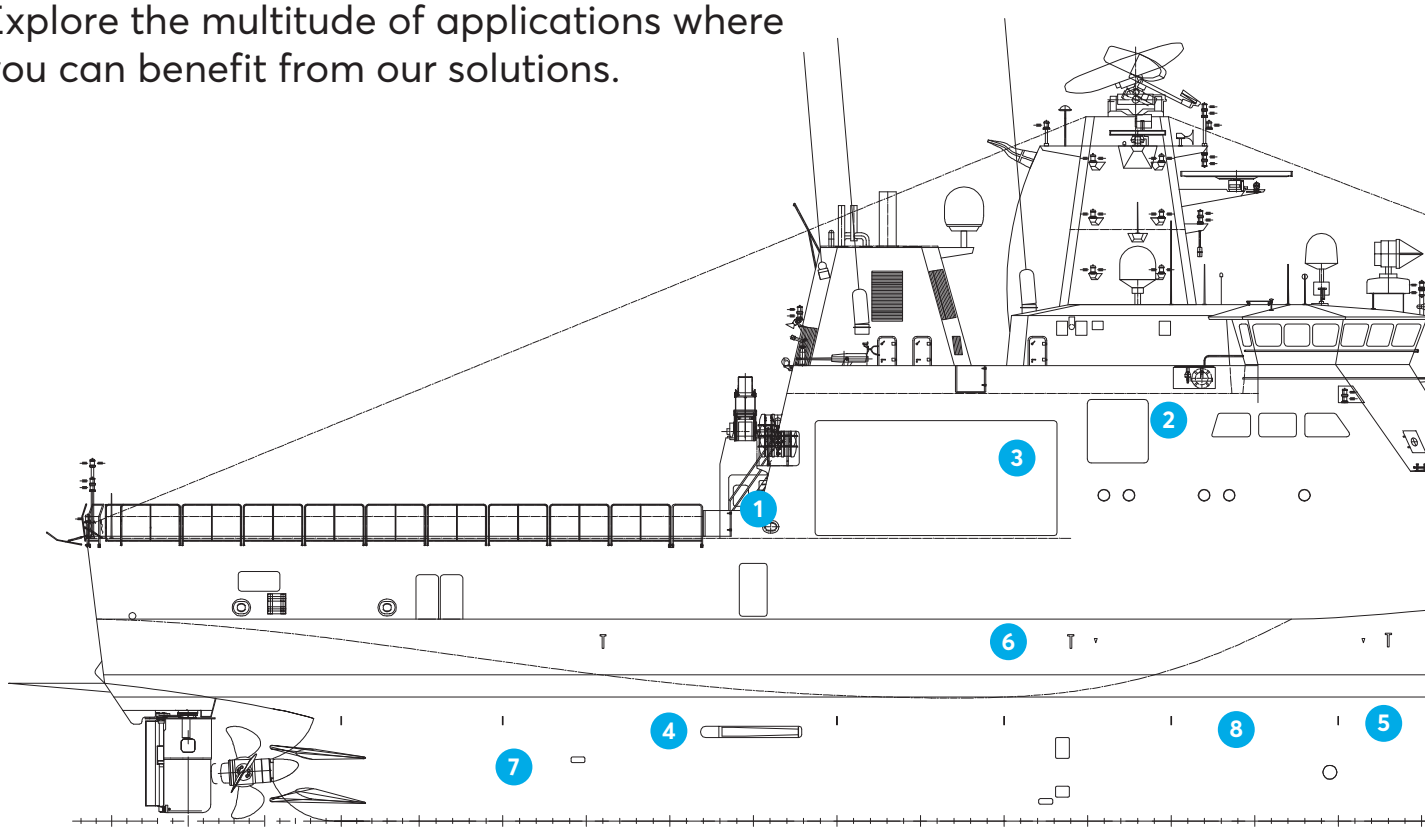

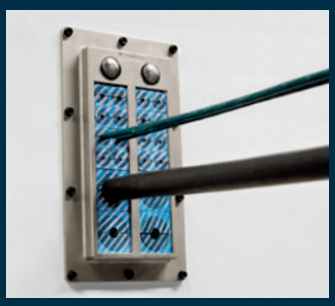

1. Cabinets & enclosures
Roxtec multi-cable transits offer several additional customer benefits and can entirely replace cable glands. Use our compact, area efficient seals to ensure EMI/EMP protection and to be able to reduce the size of your cabinets, junction boxes and other enclosures as well as to reduce engineering hours spent on cable data and cable gland configurations.

2. Command control room
Roxtec cable transits ensure electromagnetic shielding and protect equipment both inside, and around the command control room. Use our ES solutions to secure data, communication and high precision operation in order to improve survivability.

3. Communication area – crypto and sonar
Roxtec cable and pipe transits ensure electromagnetic shielding both inside, and around the sonar and crypto rooms. Use our ES solutions to protect equipment and create an internal barrier for sensitive information. Stop RFI, optimize communication security and ensure safety and survivability.

4. Engine room
Roxtec cable and pipe penetration seals are perfectly suited for large cables and pipes entering the engine room through decks and bulkheads. Use our transits to ensure the best possible protection for the heart of the ship.

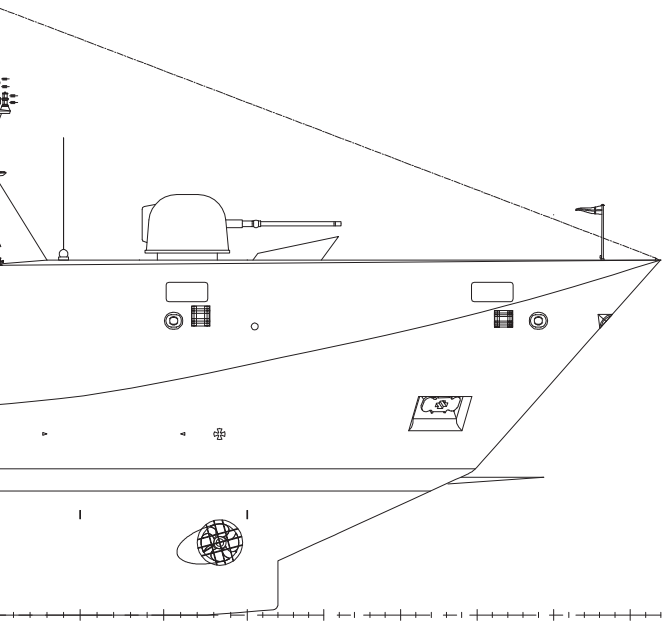

Why use Roxtec?

- Watertight
- Gas-tight
- Dust-tight
- Firestop
- EMI/EMP protection

Superior simplicity

- One opening for dozens of cables and pipes
- Flexibility for cables and pipes of different sizes
- Built-in spare capacity for upgrades and retrofits
- Solutions for electrical safety
- Ex solutions for hazardous locations

roxtec.com/navy

5. Gas-tight areas
Roxtec seals are not only your solution for safety, they provide EMI/EMP protection and excellent blast load resistance. Additionally, the transits reduce vibration and are area efficient in order to allow more free space onboard.

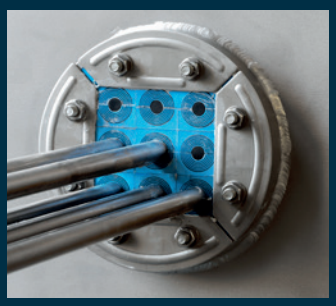

6. Hydraulic and compressed air systems
Roxtec's round and rectangular penetration seals are ideal for single or multiple cables, pipes and tubes. Use our transits to ensure certified fire protection in A-0 to A-60 rated areas and maintain the ability to reopen the seals whenever you need.

7. Power generators, motors and thrusters
Roxtec seals are perfect for large cables entering the engine room through decks and bulkheads. Use Roxtec space saving transits to achieve well-organized pipe penetrations and cable entries both inside and around machine areas and engine control rooms – and ensure multi-hazard protection for your vital equipment.

8. Water pipes
Regardless of your preferred pipe material, Roxtec has the sealing solution. Our pipe seals are A-0 and A-60 approved for all metal and most plastic pipes. Use them to ensure watertight deck and bulkhead penetrations, to avoid the risk of water spreading from any leaking pipes and to be able to reopen the transits whenever you need.

Increased safety and security

With world class transits protecting against multiple risks, you pave the way for maximum survivability. Roxtec seals are your solution for safety, EMI/EMP protection and blast load resistance. The vibration damping, the area efficiency and the light-weight nature of the pipe seals contribute to a more silent operation and more free space onboard. Our solutions simplify everything – from planning to future upgrades.

Find your transit on roxtec.com

We are present worldwide as well as online to provide the best possible service and support. We recommend you to visit roxtec.com where you can find certified cable and pipe transit solutions for more than 100 applications and benefit from the easy search functions for both sealing solutions and certificates. You can also simplify your daily work by using the free, online tool Roxtec Transit Designer™.

You are always welcome to contact us with any questions and requests.

Roxtec

SHE2017000301 ver_2/EN/2625/thoge
Roxtec ® and Multidiameter ® are registered trademarks of Roxtec in Sweden and/or other countries.